REVISIONS				
ZONE	REV.	DESCRIPTION	DATE	APPROVED
	–	ORIGINAL RELEASE JOB# 301015E	03/04/03	

DESCRIPTION:

AMC MODEL MSNN-1DR-CS00109-06B IS A REFLECTIVE SPST SWITCH WITH LOW INSERTION LOSS, SLIM LINE DESIGN AND INTERGRAL TTL DRIVER THAT WORKS FROM 0.1 TO 20.0 GHz.

M/N = MODEL NUMBER
O/N = OPTION NUMBER
S/N = SERIAL NUMBER
P/N = PART NUMBER

SPECIFICATIONS:

- FREQUENCY: 0.1 TO 20 GHz
- INSERTION LOSS: 2.5 dB MAXIMUM
- ISOLATION: 45 dB MINIMUM
- VSWR: 2.0:1
- RF POWER: 1 WATT PEAK @ 10 uSEC PULSE WIDTH
- SWITCHING TIME: 100 nS MAXIMUM
- POWER SUPPLY: +5V @ 50mA
  −15V @ 30mA
- CONTROL: TTL LOGIC "0"=ON "1"=OFF
- SIZE: 0.82" (L) x 0.63" (W) x 0.22" (H)

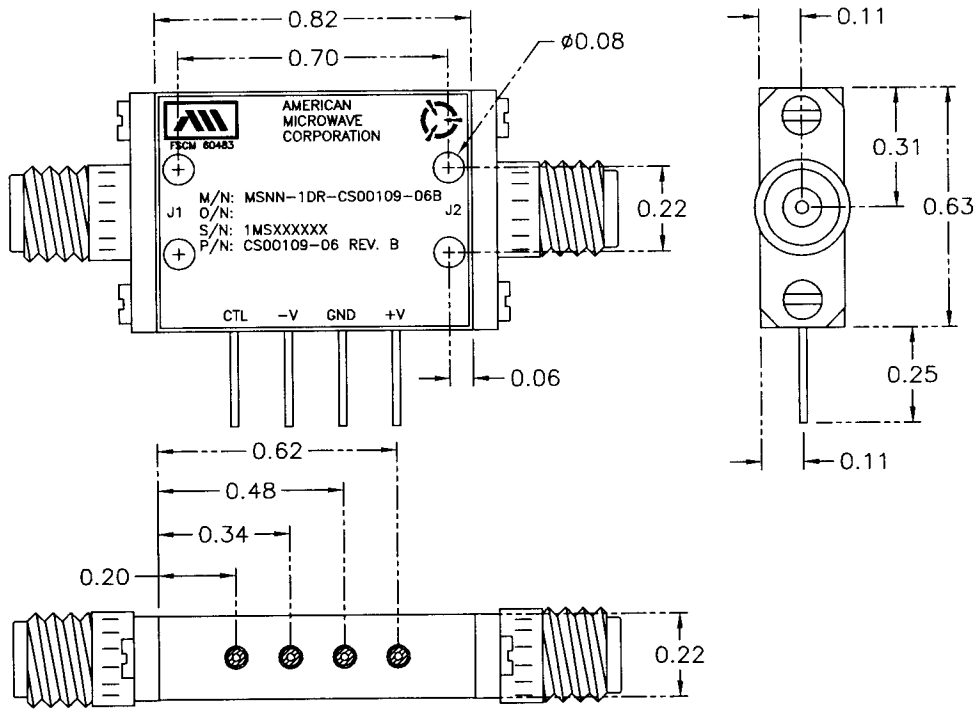

BLOCK DIAGRAM

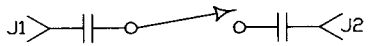

ALL DIMENSIONS ARE IN INCHES
TOLERANCES:
X.XX ±0.020
X.XXX ±0.010

ENVIRONMENTAL RATINGS

- OPERATING TEMPERATURE −65°C TO 110°C
- NON-OPERATING TEMPERATURE −65°C TO 125°C
- HUMIDITY MIL-STD-202F, METHOD 103B COND. B
- SHOCK MIL-STD-202F, METHOD 213B COND. B
- VIBRATION MIL-STD-202F, METHOD 204D COND. B
- ALTITUDE MIL-STD-202F, METHOD 105C COND. B
- TEMPERATURE CYCLE MIL-STD-202F, METHOD 107D COND. A

NOTE: THE ABOVE SPECIFICATIONS ARE SUBJECT TO CHANGE OR REVISION

CONFIDENTIAL AND PROPRIETARY

PART NO.	
APPROVALS	DATE
DRAWN KAB	3/04/03
CHECKED	
ISSUED	

AMERICAN MICROWAVE CORPORATION
FREDERICK, MARYLAND

TITLE
PRODUCT FEATURE
MSNN-1DR-CS00109-06B
WIDE BAND 1-WAY SWITCH

SIZE	FSCM NO.	DWG NO.	REV.
A	60483	100-6558	–

SCALE N:S SHEET 1 of 3